97 Ricketts Rd, Mt Waverley, VIC 3149
T.(03) 8562 0881 **F.**(03) 8562 0899
E sales@fgs.com.au
www.fgs.com.au

FGS HARDWARE
SERIOUS ABOUT HARDWARE

Glass Anchor

Standard Button Head

Technical Details

- Supplied as standard in 316 grade satin stainless steel
- Suitable for 6mm, 8mm, 10mm and 12mm glass
- Custom sizes and styles available on request
- Other finishes available include polished stainless steel or powdercoat

Specify at time of order

- Finish required
- Code from table below

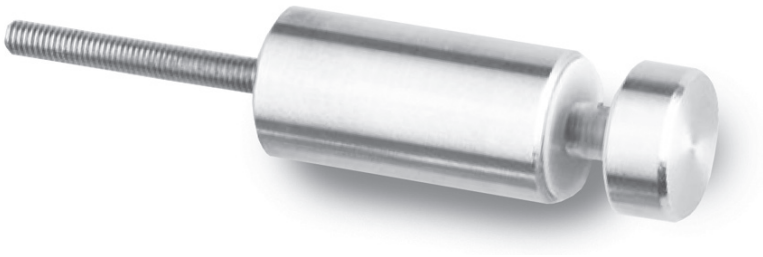

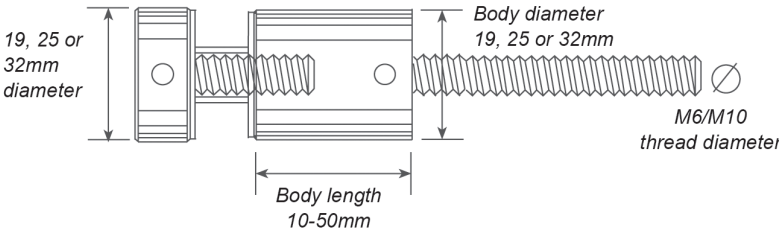

Code	Diameter	Body length	Thread	Hole in glass
GA19/10 SSS	19mm	10mm	M6	10mm
GA19/20 SSS	19mm	20mm	M6	10mm
GA19/30 SSS	19mm	30mm	M6	10mm
GA25/20 SSS	25mm	20mm	M6	10mm
GA25/30 SSS	25mm	30mm	M6	10mm
GA25/50 SSS	25mm	50mm	M6	10mm
GA32/20 SSS	32mm	20mm	M10	14mm
GA32/30 SSS	32mm	30mm	M10	14mm
GA32/50 SSS	32mm	50mm	M10	14mm

Fixing options for standard button head anchors

Nut & washer	Lag Screw	Hollow wall (M6 only)	Timber insert	Masonry
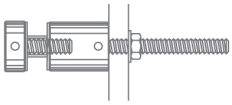	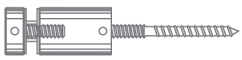	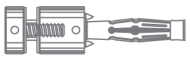	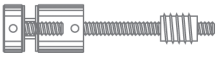	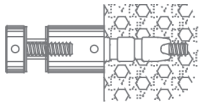
SEE FOLLOWING PAGES	LS M6 25/25 LS M10 45/55 LS M12 60/100	GASKET 47 - M6	TI M6 - M6 TI M10 - M10 TI M12 - M12	GASKET 36 - M6 GASKET 39 - M10 GASKET 43 - M12

© Copyright 2018 This document & its contents including images, drawings & specification are the exclusive property of Fethers Glazing Systems Pty Ltd, & must not be copied or used directly or indirectly in any way. Unauthorised use may result in legal action.

97 Ricketts Rd, Mt Waverley, VIC 3149
T.(03) 8562 0881 **F.**(03) 8562 0899
E sales@fgs.com.au
www.fgs.com.au

Glass Anchor

Counter Sunk Head

Technical Details

- Supplied as standard in 316 grade satin stainless steel
- Suitable for 6mm, 8mm, 10mm and 12mm glass
- Custom sizes and styles available on request
- Other finishes available include polished stainless steel, or powdercoat

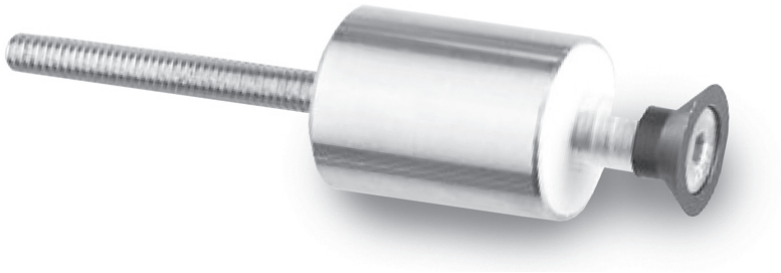

Specify at time of order

- Finish required
- Code from table below

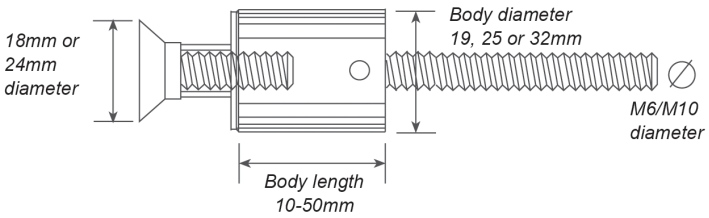

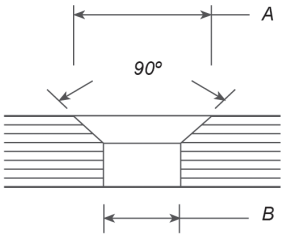

Code	Diameter	Body length	Thread	Dimension A	Dimension B
GA19/10 CSK-SSS	19mm	10mm	M6	18mm	10mm
GA19/20 CSK-SSS	19mm	20mm	M6	18mm	10mm
GA19/30 CSK-SSS	19mm	30mm	M6	18mm	10mm
GA25/20 CSK-SSS	25mm	20mm	M6	18mm	10mm
GA25/30 CSK-SSS	25mm	30mm	M6	18mm	10mm
GA25/50 CSK-SSS	25mm	50mm	M6	18mm	10mm
GA32/20 CSK-SSS	32mm	20mm	M10	24mm	16mm
GA32/30 CSK-SSS	32mm	30mm	M10	24mm	16mm
GA32/50 CSK-SSS	32mm	50mm	M10	24mm	16mm

Fixing options for standard button head anchors

Nut & washer	Lag Screw	Hollow wall (M6 only)	Timber insert	Masonry
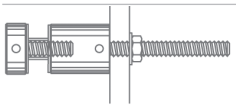	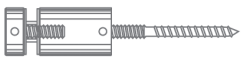	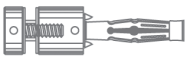	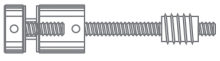	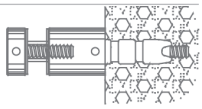
SEE FOLLOWING PAGES	LS M6 25/25 LS M10 45/55 LS M12 60/100	GASKET 47 - M6	TI M6 - M6 TI M10 - M10 TI M12 - M12	GASKET 36 - M6 GASKET 39 - M10 GASKET 43 - M12

© Copyright 2018 This document & its contents including images, drawings & specification are the exclusive property of Fethers Glazing Systems Pty Ltd, & must not be copied or used directly or indirectly in any way. Unauthorised use may result in legal action.

97 Ricketts Rd, Mt Waverley, VIC 3149
T.(03) 8562 0881 **F.**(03) 8562 0899
E sales@fgs.com.au
www.fgs.com.au

FGS HARDWARE
SERIOUS ABOUT HARDWARE

Glass Anchor

Counter Sunk Head With Cap

Technical Details

- Supplied as standard in 316 grade satin stainless steel
- Suitable for 6mm, 8mm, 10mm and 12mm glass
- Custom sizes and styles available on request
- Other finishes available include polished stainless steel or powdercoat

Specify at time of order

- Finish required
- Code from table below

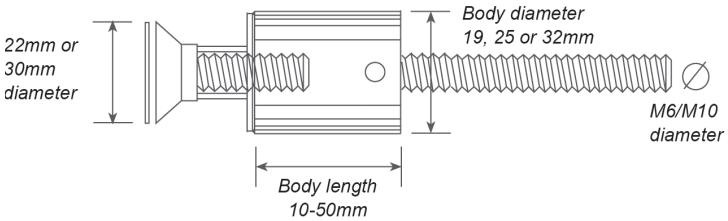

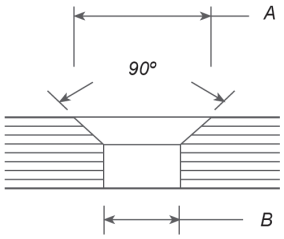

Code	Diameter	Body length	Thread	Dimension A	Dimension B
GA19/10 CAP-SSS	19mm	10mm	M6	22mm	10mm
GA19/20 CAP-SSS	19mm	20mm	M6	22mm	10mm
GA19/30 CAP-SSS	19mm	30mm	M6	22mm	10mm
GA25/20 CAP-SSS	25mm	20mm	M6	22mm	10mm
GA25/30 CAP-SSS	25mm	30mm	M6	22mm	10mm
GA25/50 CAP-SSS	25mm	50mm	M6	22mm	10mm
GA32/20 CAP-SSS	32mm	20mm	M10	30mm	18mm
GA32/30 CAP-SSS	32mm	30mm	M10	30mm	18mm
GA32/50 CAP-SSS	32mm	50mm	M10	30mm	18mm

Fixing options for standard button head anchors

Nut & washer	Lag Screw	Hollow wall (M6 only)	Timber insert	Masonry
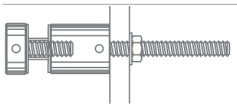	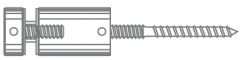	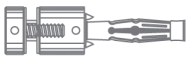	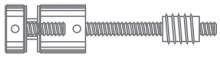	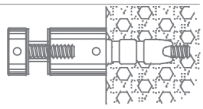
SEE FOLLOWING PAGES	LS M6 25/25 LS M10 45/55 LS M12 60/100	GASKET 47 - M6	TI M6 - M6 TI M10 - M10 TI M12 - M12	GASKET 36 - M6 GASKET 39 - M10 GASKET 43 - M12

© Copyright 2018 This document & its contents including images, drawings & specification are the exclusive property of Fethers Glazing Systems Pty Ltd, & must not be copied or used directly or indirectly in any way. Unauthorised use may result in legal action.

97 Ricketts Rd, Mt Waverley, VIC 3149
T.(03) 8562 0881 **F.**(03) 8562 0899
E sales@fgs.com.au
www.fgs.com.au

BF1000

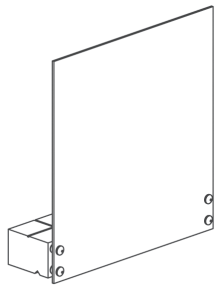

Glass Anchor

How the Product Code works

BF1000-50/10

Product Diameter Spacer

Technical Details

- 316 grade satin stainless steel finish (ex stock) other finishes can be made to order
- Spacer options 10, 15, 20, 30 and 50mm
- Suitable for 10, 12, 15, and 19mm glass
- M12 Threaded rod as standard
- Can supply lag screws, timber inserts or masonry fixings if required

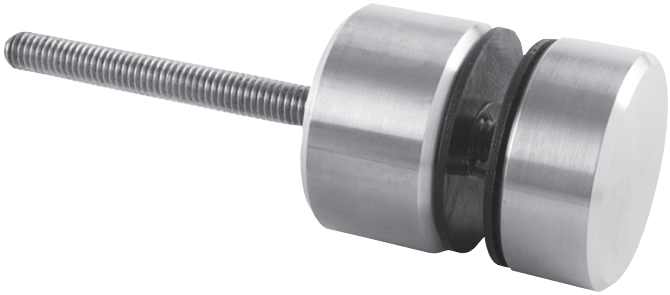

Specify at time of order

- Finish required
- Diameter & Spacer options:
  - BF1000-38/10
  - BF1000-38/15
  - BF1000-38/20
  - BF1000-38/30
  - BF1000-38/50
  - BF1000-50/10
  - BF1000-50/15
  - BF1000-50/20
  - BF1000-50/30
  - BF1000-50/50
- Rod and fixing type

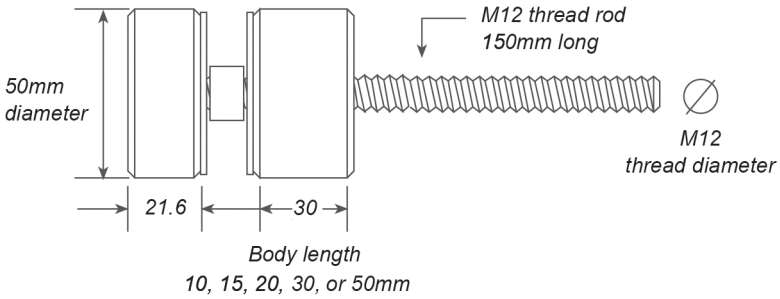

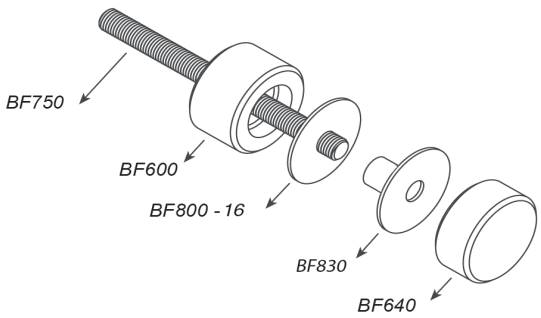

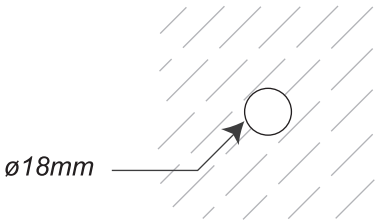

© Copyright 2018 This document & its contents including images, drawings & specification are the exclusive property of Fethers Glazing Systems Pty Ltd, & must not be copied or used directly or indirectly in any way. Unauthorised use may result in legal action.

97 Ricketts Rd, Mt Waverley, VIC 3149
T.(03) 8562 0881 **F.**(03) 8562 0899
E sales@fgs.com.au
www.fgs.com.au

BFA1000 Adjustable

Adjustable Glass Anchor

How the Product Code works

BFA1000-50/20

Product Diameter Spacer

Technical Details

- 316 grade satin stainless steel finish
- Spacer options;
  - 50mm diameter:
    20-25mm and 40-45mm
  - 35mm diameter:
    30-35mm and 45-50mm
- Suitable for 10mm, 12mm and 15mm glass
- Glass hole required;
  - 35mm diameter: 30mm
  - 50mm diameter: 34mm
- Easy adjustment from centre, after installation of glass
- Single gasket suitable for various glass thicknesses.

Available Finishes

- Polished Stainless Steel
- Satin Stainless Steel

Specify at time of order

- Finish required
- Diameter & Spacer options:
  - BFA1000-35/30
  - BFA1000-35/45
  - BFA1000-50/20
  - BFA1000-50/40

BFA1000 50/20

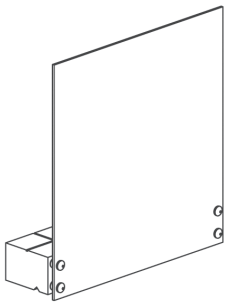

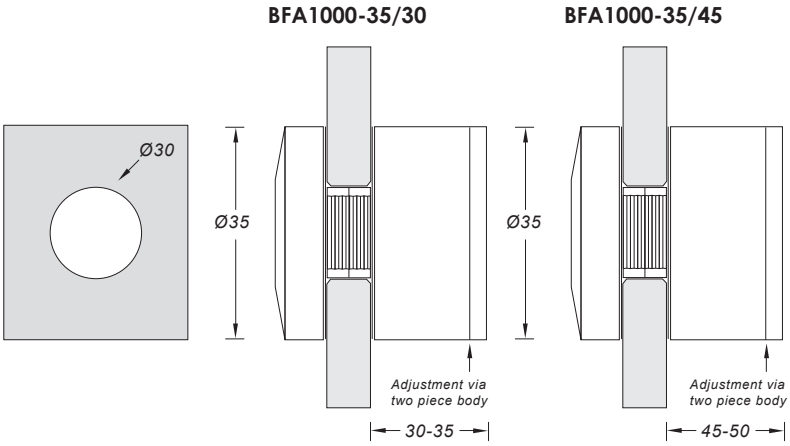

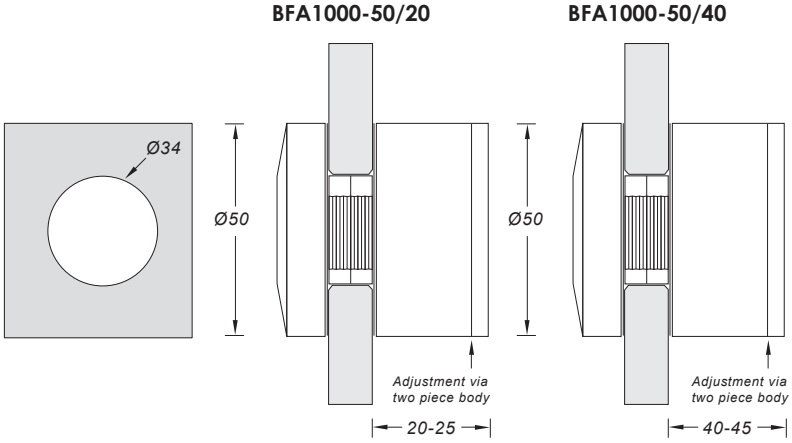

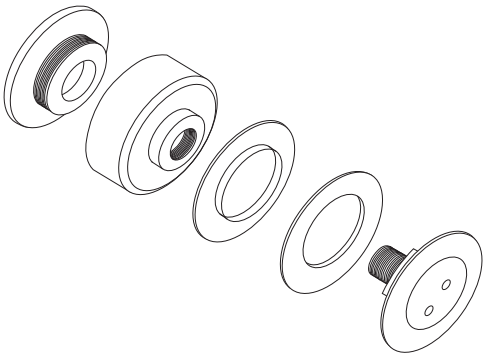

© Copyright 2018 This document & its contents including images, drawings & specification are the exclusive property of Fethers Glazing Systems Pty Ltd, & must not be copied or used directly or indirectly in any way. Unauthorised use may result in legal action.

97 Ricketts Rd, Mt Waverley, VIC 3149
T.(03) 8562 0881 **F.**(03) 8562 0899
E sales@fgs.com.au
www.fgs.com.au

BF1100

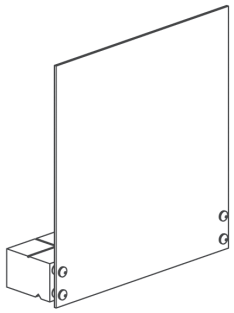

Glass Anchor

How the Product Code works

BF1100-50/10

Product Diameter Spacer

Technical Details

- 316 grade satin stainless steel finish (ex stock) other finishes can be made to order
- Spacer options 10, 15, 20, 30 and 50mm
- Suitable for 10, 12, 15, and 19mm glass
- M12 Threaded rod as standard
- Can supply lag screws, timber inserts or masonry fixings if required

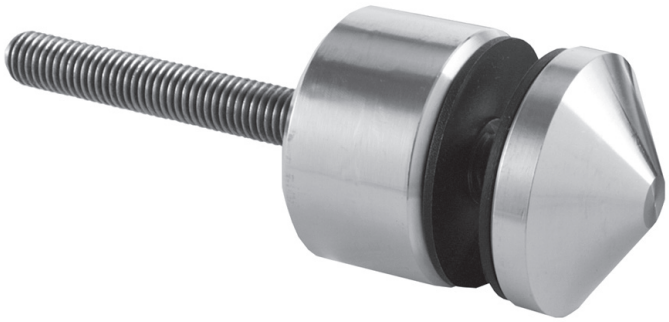

Specify at time of order

- Finish required
- Diameter & Spacer options:
  - BF1100-38/10
  - BF1100-38/15
  - BF1100-38/20
  - BF1100-38/30
  - BF1100-38/50
  - BF1100-50/10
  - BF1100-50/15
  - BF1100-50/20
  - BF1100-50/30
  - BF1100-50/50
- Rod and fixing type

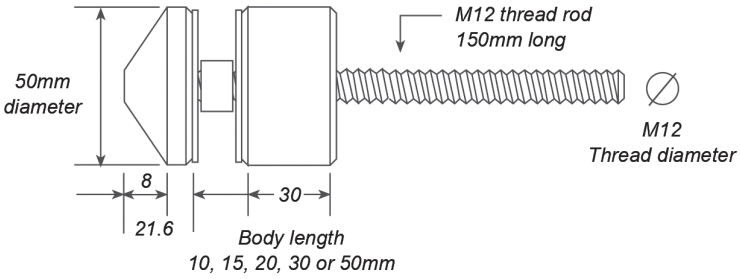

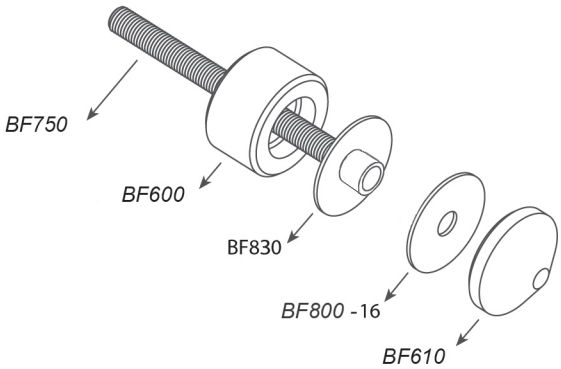

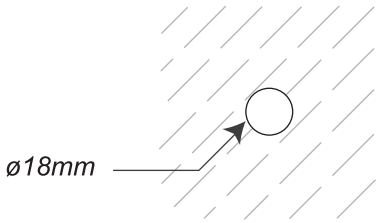

© Copyright 2018 This document & its contents including images, drawings & specification are the exclusive property of Fethers Glazing Systems Pty Ltd, & must not be copied or used directly or indirectly in any way. Unauthorised use may result in legal action.

97 Ricketts Rd, Mt Waverley, VIC 3149
T.(03) 8562 0881 **F.**(03) 8562 0899
E sales@fgs.com.au
www.fgs.com.au

BF1150

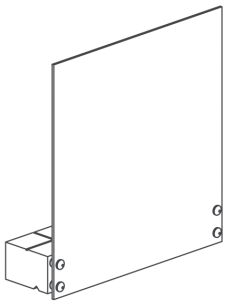

Glass Anchor

How the Product Code works

BF1150-50/10

Product Diameter Spacer

Technical Details

- 316 grade satin stainless steel finish (ex stock) other finishes can be made to order
- Spacer options 10, 15, 20, 30 and 50mm
- Suitable for 10, 12, 15, and 19mm glass
- Glass hole required is 24mm diameter
- M12 Threaded rod as standard
- Can supply lag screws, timber inserts or masonry fixings if required

Specify at time of order

- Finish required
- Diameter & Spacer options:
  - BF1150-38/10
  - BF1150-38/15
  - BF1150-38/20
  - BF1150-38/30
  - BF1150-38/50
  - BF1150-50/10
  - BF1150-50/15
  - BF1150-50/20
  - BF1150-50/30
  - BF1150-50/50
- Rod and fixing type

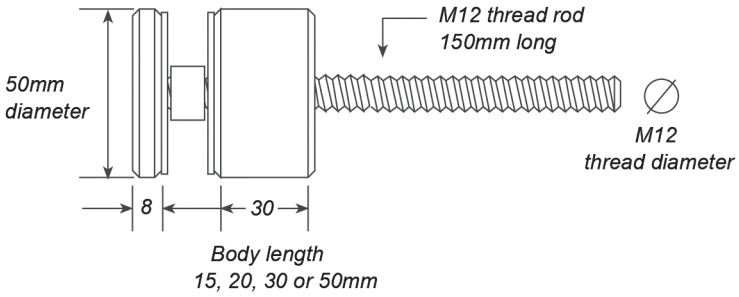

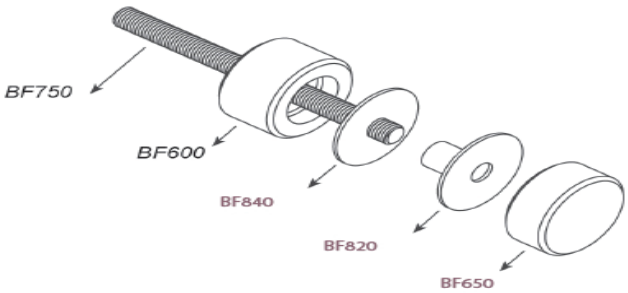

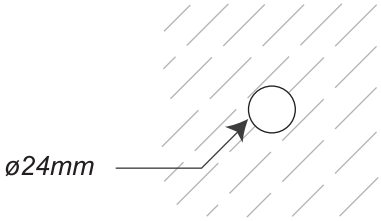

PLEASE NOTE LARGER HOLE REQUIRED

© Copyright 2018 This document & its contents including images, drawings & specification are the exclusive property of Fethers Glazing Systems Pty Ltd, & must not be copied or used directly or indirectly in any way. Unauthorised use may result in legal action.

97 Ricketts Rd, Mt Waverley, VIC 3149
T.(03) 8562 0881 **F.**(03) 8562 0899
E sales@fgs.com.au
www.fgs.com.au

BF1200

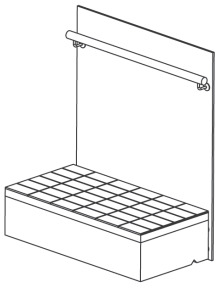

Handrail Fixing

BF1200-38

For 38mm diameter

BF1200-50

For 50mm diameter

Technical Details

- 316 grade satin stainless steel finish (ex stock) other finishes can be made to order
- Suitable for mounting handrails to the glass panel
- Suitable for 10, 12, 15, and 19mm glass
- Saddles (flat & curved) can be supplied loose or welded on to upright if required. Please specify if required.

Specify at time of order

- Finish required
- Flat or curved saddle (welded or loose)
- Type:
  - BF1200-38
  - BF1200-50

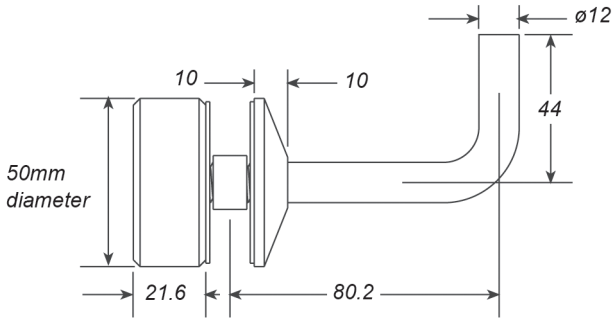

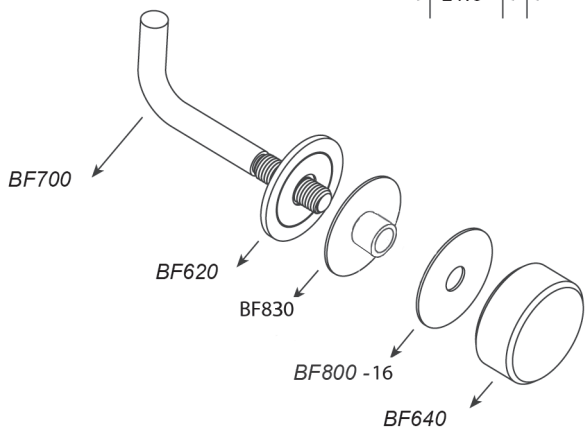

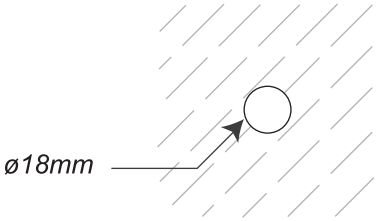

© Copyright 2018 This document & its contents including images, drawings & specification are the exclusive property of Fethers Glazing Systems Pty Ltd, & must not be copied or used directly or indirectly in any way. Unauthorised use may result in legal action.

97 Ricketts Rd, Mt Waverley, VIC 3149
T.(03) 8562 0881 **F.**(03) 8562 0899
E sales@fgs.com.au
www.fgs.com.au

BF1300

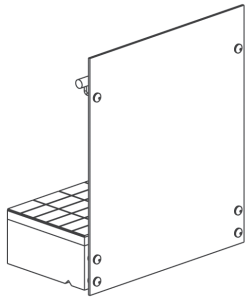

Handrail Fixing

BF1300-38

For 38mm diameter

BF1300-50

For 50mm diameter

Technical Details

- 316 grade satin stainless steel finish (ex stock) other finishes can be made to order
- Suitable for mounting handrails to the glass panel
- Suitable for 10, 12, 15, and 19mm glass
- Saddles (flat & curved) can be supplied loose or welded on to upright if required. Please specify if required.

Specify at time of order

- Finish required
- Flat or curved saddle (welded or loose)
- Type:
  - BF1300-38
  - BF1300-50

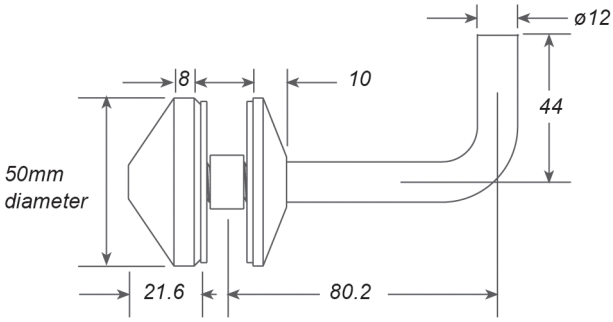

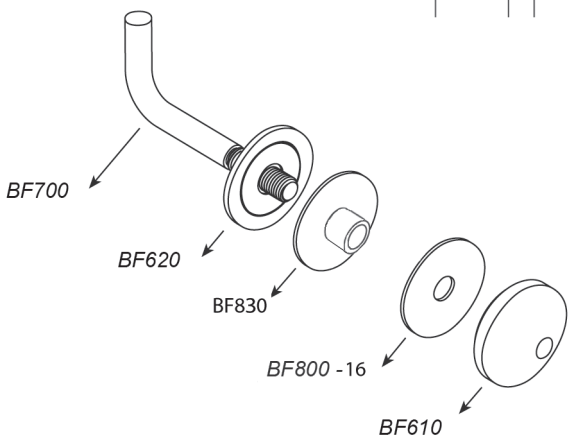

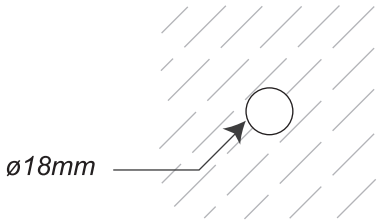

© Copyright 2018 This document & its contents including images, drawings & specification are the exclusive property of Fethers Glazing Systems Pty Ltd, & must not be copied or used directly or indirectly in any way. Unauthorised use may result in legal action.

97 Ricketts Rd, Mt Waverley, VIC 3149
T.(03) 8562 0881 **F.**(03) 8562 0899
E sales@fgs.com.au
www.fgs.com.au

BF1400

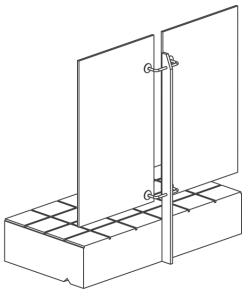

Post Attachment

BF1400-38

For 38mm diameter

BF1400-50

For 50mm diameter

Technical Details

- 316 grade satin stainless steel finish (ex stock) other finishes can be made to order
- Designed to be welded to a vertical post to attach the glass panels
- Suitable for 10, 12, 15, and 19mm glass
- Can also be used to mount handrails to glass. Saddles (flat & curved) can be supplied loose or welded on to upright if required. Please specify if required.

Specify at time of order

- Finish required
- Flat or curved saddle (welded or loose)
- Type:
  - BF1400-38
  - BF1400-50

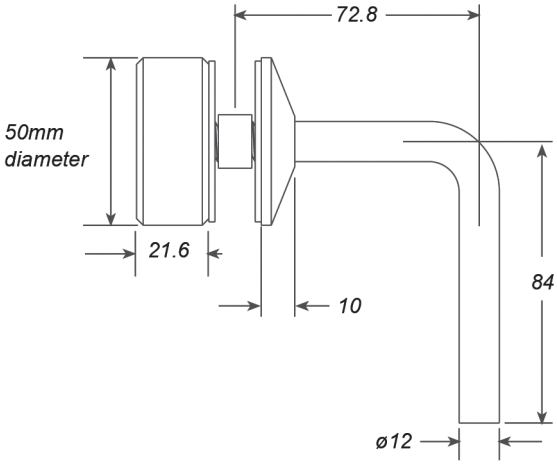

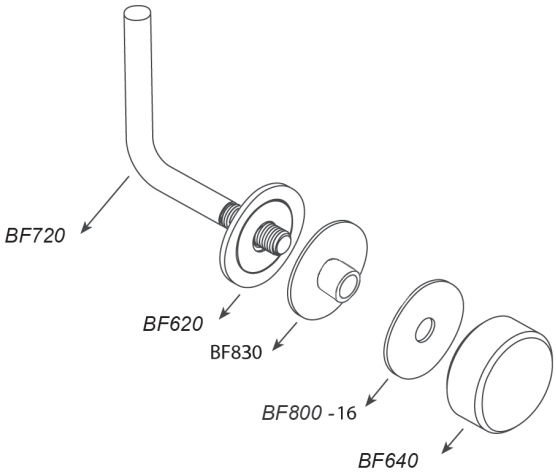

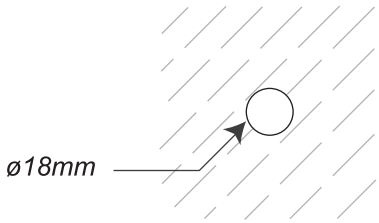

© Copyright 2018 This document & its contents including images, drawings & specification are the exclusive property of Fethers Glazing Systems Pty Ltd, & must not be copied or used directly or indirectly in any way. Unauthorised use may result in legal action.

97 Ricketts Rd, Mt Waverley, VIC 3149
T.(03) 8562 0881 **F.**(03) 8562 0899
E sales@fgs.com.au
www.fgs.com.au

BF1500

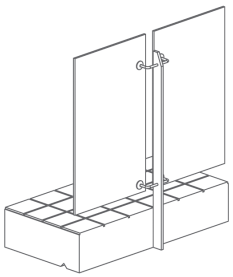

Post Attachment

BF1500-38

For 38mm diameter

BF1500-50

For 50mm diameter

Technical Details

- 316 grade satin stainless steel finish (ex stock) other finishes can be made to order
- Designed to be welded to a vertical post to attach the glass panels
- Suitable for 10, 12, 15, and 19mm glass
- Can also be used to mount handrails to glass. Saddles (flat & curved) can be supplied loose or welded on to upright if required. Please specify if required.

Specify at time of order

- Finish required
- Flat or curved saddle (welded or loose)
- Type:
  - BF1500-38
  - BF1500-50

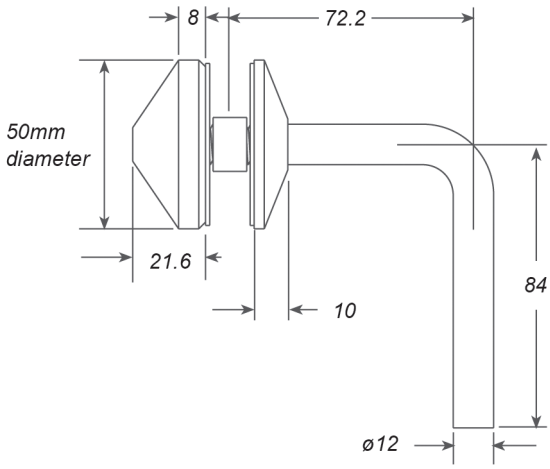

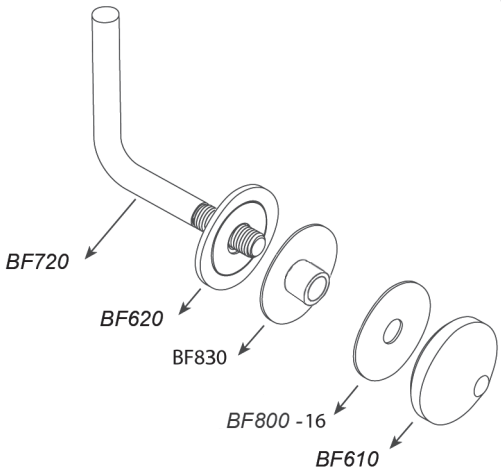

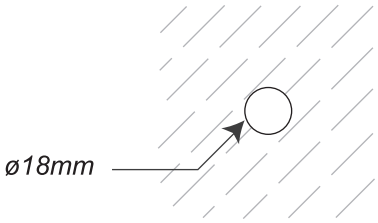

© Copyright 2018 This document & its contents including images, drawings & specification are the exclusive property of Fethers Glazing Systems Pty Ltd, & must not be copied or used directly or indirectly in any way. Unauthorised use may result in legal action.

97 Ricketts Rd, Mt Waverley, VIC 3149
T.(03) 8562 0881 **F.**(03) 8562 0899
E sales@fgs.com.au
www.fgs.com.au

BF1350

Handrail Fixing

BF1350-50

For 50mm diameter

Technical Details

- 316 grade stainless steel finish
- Suitable for mounting handrails to glass or directly into a wall
- Can be attached to timber, aluminium or steel
- Suitable for fixing to handrails (curved or flat)
- Suitable for 10 - 25.52mm glass
- Contains 6mm Slimline Flat Cap
- Contains M10 Thread
- Contains 75mm offset to be code compliant when used with a handrail up to 50mm diameter

Specify at time of order

- Finish required - Polished/Satin
- Flat or curved saddle (Sold Separately)
  - BF340 - Curved
  - BF350 - Flat

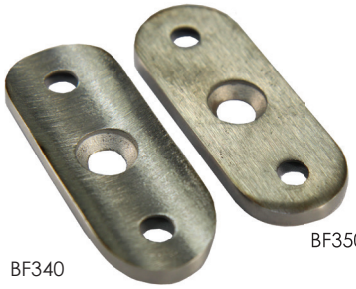

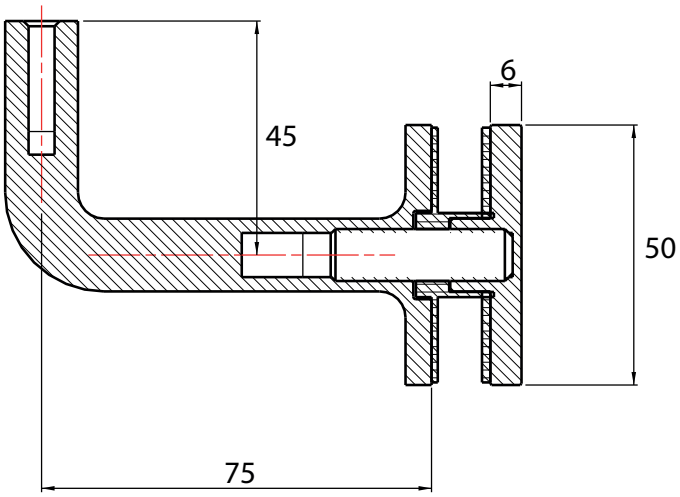

Individual Components all suitable for M10 Thread

- BF705 - 75mm Handrail Bracket with M10 Thread
- BF805-50 - 49mm x 1.2mm Gasket with 8.6mm Flange
- BF845-50 - 49mm x 1.6mm Nylon Washer
- BF655 - 50mm Diameter 6mm Slimline Nut

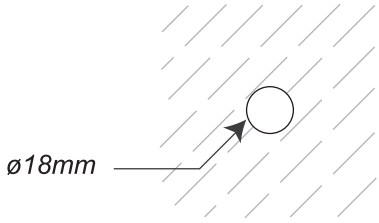

97 Ricketts Rd, Mt Waverley, VIC 3149
T.(03) 8562 0881 **F.**(03) 8562 0899
E sales@fgs.com.au
www.fgs.com.au

BF1250/BF1050

Glass Anchor

BF1250-50/20 - 6mm flat cap
BF1050-50/20 - 10mm flat cap

Technical Details

- 316 grade stainless steel finish
- Perfectly Suited for mounting glass on 42mm timber stringers
- 50mm Diameter
- 20mm Spacer
- Suitable for 12-19mm glass
- Supplied with M10 Lag Screw suitable for fixing into timber

Specify at time of order

- Finish required - Polished/Satin
- Cap Thickness

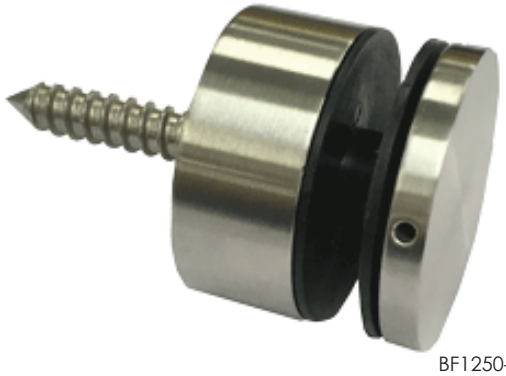

BF1250-50/20

BF1050-50/20

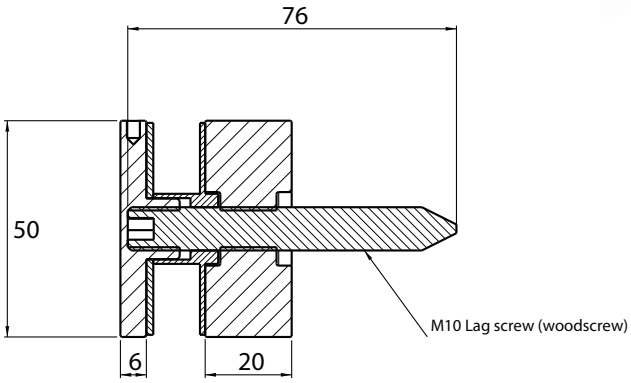

BF1250-50/20

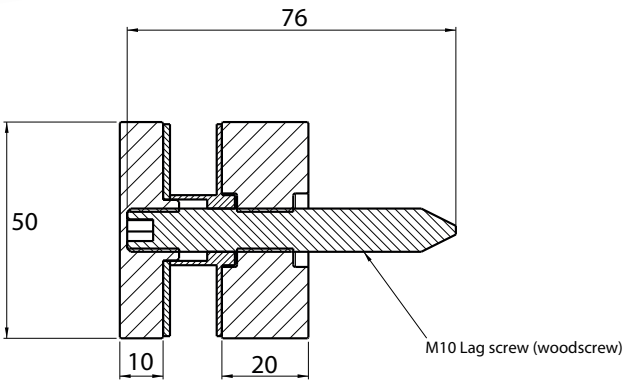

BF1050-50/20

Individual Components all suitable for M10 Thread
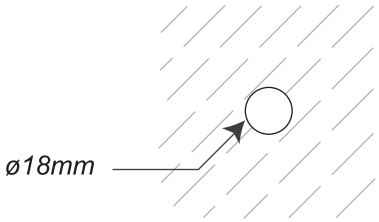
- BF605-50/20 - 50mm Diameter x 20mm Spacer for M10 Thread
- LS M10 38/38 - M10 Timber Fix Lag Screw - 76mm Overall Length
- BF805-50 - 49mm x 1.2mm Gasket with 8.6mm Flange
- BF845-50 - 49mm x 1.6mm Nylon Washer
- BF655 - 50mm Diameter 6mm Slimline Nut
- BF656 - 50mm Diameter 10mm Slimline Nut